"Suppliers of Ferrofluids for Research and Industry"

Ferrofluids for Sealing Applications

Ferrofluids

Ferrofluids are stable colloidal dispersions of single domain magnetic particles, typically 10nm in diameter. The particles are usually Fe_3O_4 (magnetite) and are held in suspension by the use of dispersing agents which are compatible with both the carrier fluid and the magnetic particles. The carrier fluid is usually a synthetic oil.

Role of ferrofluid in a seal

Traditional labyrinth rotary seals require constant maintenance to perform at an optimum level. They are also subject to wear and accumulation of particulate material, which can compromise the performance of a seal. By the use of a ferrofluid to act as a magnetic O-ring and used in conjunction with traditional labyrinth seals, a rotary seal is produced where the shaft of the seal provides hermetic sealing with zero leakage. Due to the magnetic nature of the ferrofluid seal, particles are actually expelled from the system rather than accumulated. As the ferrofluid consists of a high quality lubricating oil there is minimal wear. Where a large pressure differential is required, ferrofluid based seals typically give a burst pressure of 2 atmospheres. Other sealing applications include the use of ferrofluid to seal hard disk drives. Liquids Research Limited have a proven track record in providing high quality ferrofluids for vacuum and non vacuum sealing applications. We manufacture fluids of high colloidal stability in a variety of carrier liquids, including synthetic oils and in perfluoropolyethers (PFPE) for use in hostile environments

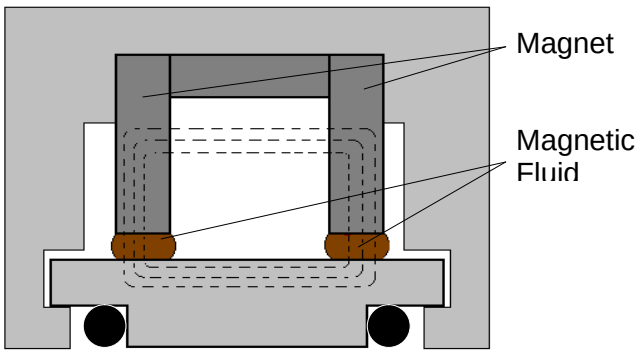

SMART SEAL MAGNETIC CIRCUIT

Fluid specifications

Fluids with saturation magnetisation of up to 600 Gauss can be produced with viscosities between 1000cp and 5000cp. See below for details.

Hydrocarbon based for vacuum and elevated temperature use (100°C+)

	Ms (Gauss)	Particle diameter (nm)	Viscosity (cp)	Vapour Pressure (Torr)
SHGS4-U	450 (45 mT)	10	3000	<1E-11 (at 20°C)

PFPE for hostile environments

	Ms (Gauss)	Particle diameter (nm)	Viscosity (cp)	Vapour Pressure (Torr)
SPBS26	450 (45 mT)	10	3000	<1E-9

Hydrocarbon based for vacuum and non vacuum

	Ms (Gauss)	Particle diameter (nm)	Viscosity (cp)	Vapour Pressure (Torr)
SHAS1S2-A	600 (60 mT)	10	1200	<1E-9
SHAS1S3-A	400 (40mT)	10	2000	<1E-9
SHAS1S3-B	300 (30 mT)	10	1500	<1E-9

Hydrocarbon for disc drive exclusion seals

	Ms (Gauss)	Particle diameter (nm)	Viscosity (cp)	Vapour Pressure (Torr)
SHAS4-A	200 (20 mT)	10	500	<1E-9
SHAS4-B	300 (30 mT)	10	1000	<1E-9

Viscosity values are ± 10% and Ms values are ± 5% of the quoted values. Viscosity measured at 27°C. Vapour pressures at 20°C, unless otherwise stated.

Ordering Information

If the above fluids do not meet with your requirements please do not hesitate to contact us so that a fluid to your specification can be formulated. All fluids are available in standard sizes of 30ml, 50ml and 100ml. Orders may be placed by fax and are delivered by courier normally within five working days world-wide.

Health and Safety

Ferrofluids are not classed as hazardous materials. Normal industrial health and safety procedures should be practised when handling any ferrofluid. Rubber or latex gloves and goggles should be worn. In case of contact with skin the affected area should be washed with mild soap and water. In case of eye contact, the eyes should be flushed with plenty of clean water for 15 minutes. All our ferrofluids are supplied with a safety sheet.

For further information please contact our technical department at the address below.

LIQUIDS RESEARCH LIMITED
UNIT 3B MENTEC DEINIOL ROAD BANGOR GWYNEDD LL57 2UP UK
TEL: +44(0)1248 352204 / 354103 FAX: +44(0)1248 352204 / 352497
Email: mail@liquidsresearch.co.uk Web:http://www.liquidsresearch.com